settore elettrico > terminali vari > terminali ad occhiello

Terminali ad occhiello

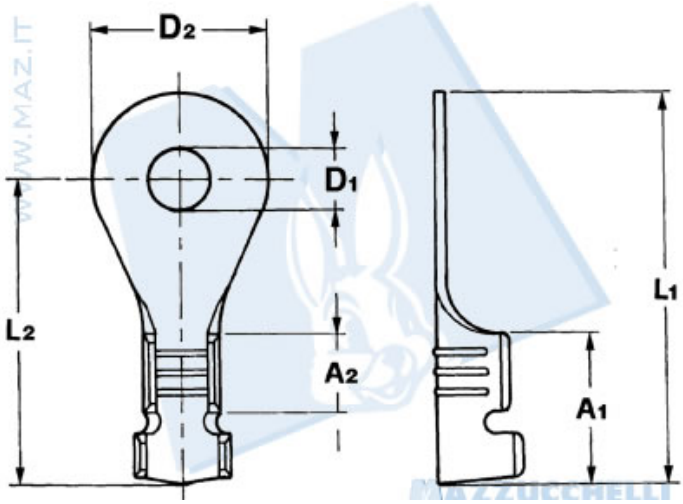

Codice Nr.	Sezione cavo	Ã¸ Isolante	Spessore materiale	A1	A2	D1	D2	L1	L2
11123	0.25 Ã· 0.75	1.5 Ã· 2.2	0.40	5.5	2.5	2.6	4	10	8
10840	0.3 Ã· 1	1.7 Ã· 2.5	0.75	7.8	4	4.3	8.7	20	15.7
10797	0.3 Ã· 1	1.7 Ã· 2.5	0.75	7.8	4	5.3	8.7	20	15.7
10843	0.3 Ã· 1	1.7 Ã· 2.5	0.75	7.8	4	6.3	8.7	20	15.7
11034	0.5 Ã· 1	1.9 Ã· 2.5	0.60	9	4.2	3.2	14	26	19
11027	0.5 Ã· 1	1.9 Ã· 2.5	0.60	9	4.2	4.3	14	26	19
11028	0.5 Ã· 1	1.9 Ã· 2.5	0.60	9	4.2	5.3	14	26	19
11029	0.5 Ã· 1	1.9 Ã· 2.5	0.60	9	4.2	6.3	14	26	19
11030	0.5 Ã· 1	1.9 Ã· 2.5	0.60	9	4.2	8.3	14	26	19
11031	0.5 Ã· 1	1.9 Ã· 2.5	0.60	9	4.2	10.3	14	26	19
10564	0.5 Ã· 1.5	1.9 Ã· 3.3	0.50	5	2.5	2.5	4.5	11.25	9
11002	0.5 Ã· 1.5	1.9 Ã· 3.3	0.50	5	2.5	2.6	4.5	11.25	9
10565	0.5 Ã· 1.5	1.9 Ã· 3.3	0.50	5	2.5	2.7	4.5	11.25	9
10572	0.5 Ã· 1.5	1.9 Ã· 3.3	0.50	7.8	4	2.7	7	17.5	14
10456	0.5 Ã· 1.5	1.9 Ã· 3.3	0.60	7.8	4	3.2	8.7	20	15.7
10852	0.5 Ã· 1.5	1.9 Ã· 3.3	0.50	5	2.5	3.2	5.3	11.65	9
10570	0.5 Ã· 1.5	1.9 Ã· 3.3	0.50	5	2.5	3.7	6.2	12.1	9
10181	0.5 Ã· 1.5	1.9 Ã· 3.3	0.50	7.8	4	4.2	7	17.5	14
10571	0.5 Ã· 1.5	1.9 Ã· 3.3	0.50	5	2.5	4.3	6.2	12.1	9
10577	0.5 Ã· 1.5	1.9 Ã· 3.3	0.60	7.8	4	4.3	8.7	20	15.7
10432	0.5 Ã· 1.5	1.9 Ã· 3.3	0.60	7.8	4	4.5	8.7	20	15.7
10575	0.5 Ã· 1.5	1.9 Ã· 3.3	0.50	7.8	4	5.2	7	17.5	14