settore elettrico > terminali vari > terminali ad occhiello

Terminali ad occhiello

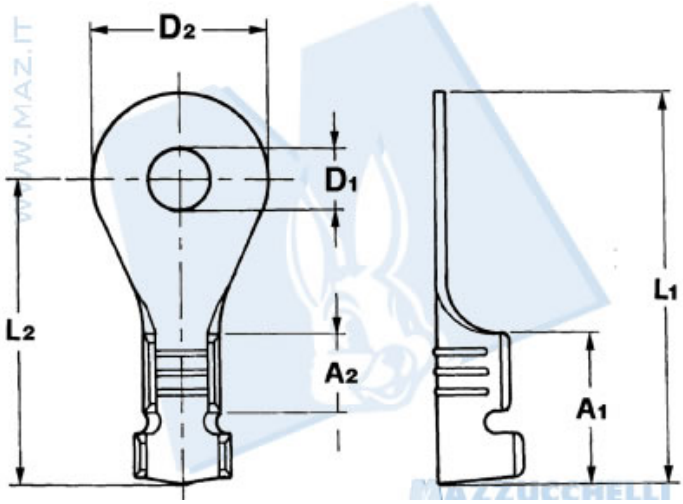

Codice Nr.	Sezione cavo	Ã¸ Isolante	Spessore materiale	A1	A2	D1	D2	L1	L2
10425	0.5 Ã· 1.5	1.9 Ã· 3.3	0.60	7.8	4	5.3	8.7	20	15.7
10121	0.5 Ã· 1.5	1.9 Ã· 3.3	0.50	9.7	4.2	6.3	10	23.2	18.2
10415	0.5 Ã· 1.5	1.9 Ã· 3.3	0.60	7.8	4	6.5	8.7	20	15.7
5300	0.5 Ã· 1.5	1.9 Ã· 3.3	0.60	9.7	4	8.3	12	25	19
10458	1 Ã· 2.5	2.5 Ã· 4	0.50	7.5	4	2.7	7	17.5	14
10191	1 Ã· 2.5	2.5 Ã· 4	0.50	7.1	3.5	2.7	7.8	17.5	13.6
10113	1 Ã· 2.5	2.5 Ã· 4	0.50	7.5	4	3.2	7	17.5	14
10105	1 Ã· 2.5	2.5 Ã· 4	0.50	7.1	3.5	3.2	7.8	17.5	13.6
10562	1 Ã· 2.5	2.5 Ã· 4	0.50	7.5	4	3.7	7	17.5	14
10210	1 Ã· 2.5	2.5 Ã· 4	0.50	7.5	4	4.3	7	17.5	14
10104	1 Ã· 2.5	2.5 Ã· 4	0.50	7.1	3.5	4.3	7.8	17.5	13.6
10182	1 Ã· 2.5	2.5 Ã· 4	0.50	7.1	3.5	4.5	7.8	17.5	13.6
10109	1 Ã· 2.5	2.5 Ã· 4	0.50	7.1	3.5	5.2	7.8	17.5	13.6
10651	1 Ã· 3	2.5 Ã· 4.2	0.60	7.8	4	4.3	8.7	20	15.7
10800	3 Ã· 5	4.2 Ã· 4.8	0.80	9.8	4.5	5.2	9	25	20.5
10802	3 Ã· 5	4.2 Ã· 4.8	0.80	9	4.2	8.3	14	26	19
10185	3 Ã· 5	4.2 Ã· 4.8	0.80	9	4.2	10.3	14	26	19
10125	3 Ã· 6	4.2 Ã· 5.1	0.60	9.8	4.5	5.2	12	26	20
10213	3 Ã· 6	4.2 Ã· 5.1	0.60	9.8	4.5	6.3	12	26	20
10214	3 Ã· 6	4.2 Ã· 5.1	0.60	9.8	4.5	8.3	12	26	20