articoli di fissaggio > rivetti a strappo in alluminio > rivetti a strappo in alluminio

Rivetti in lega di alluminio AlMg 3.5

Con chiodo in acciaio zincato

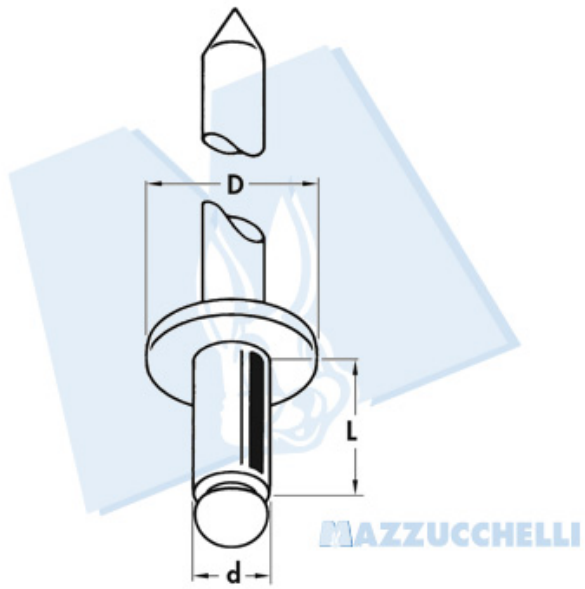

WWW.MAZ.IT
MAZZUCCHELLI

Kg	Kg	d	L	D	mm	mm min ÷ max
35 (343 N)	45 (441 N)	2.4	6	5	2.5	0.5 Ã· 3
35 (343 N)	45 (441 N)	2.4	8	5	2.5	3 Ã· 5
35 (343 N)	45 (441 N)	2.4	10	5	2.5	5 Ã· 7
35 (343 N)	45 (441 N)	2.4	12	5	2.5	7 Ã· 9
65 (637 N)	90 (882 N)	3	5	6	3.1	0.5 Ã· 2
65 (637 N)	90 (882 N)	3	6	6	3.1	1 Ã· 3
65 (637 N)	90 (882 N)	3	7	6	3.1	2 Ã· 4
65 (637 N)	90 (882 N)	3	8	6	3.1	3 Ã· 5
65 (637 N)	90 (882 N)	3	9	6	3.1	4 Ã· 6
65 (637 N)	90 (882 N)	3	10	6	3.1	5 Ã· 7
65 (637 N)	90 (882 N)	3	11	6	3.1	6 Ã· 8
65 (637 N)	90 (882 N)	3	12	6	3.1	7 Ã· 9
65 (637 N)	90 (882 N)	3	14	6	3.1	9 Ã· 11
65 (637 N)	90 (882 N)	3	16	6	3.1	11 Ã· 13
65 (637 N)	90 (882 N)	3	18	6	3.1	13 Ã· 15
70 (686 N)	100 (980 N)	3.2	5	6.5	3.3	0.5 Ã· 2
70 (686 N)	100 (980 N)	3.2	6	6.5	3.3	1 Ã· 3
70 (686 N)	100 (980 N)	3.2	7	6.5	3.3	2 Ã· 4
70 (686 N)	100 (980 N)	3.2	8	6.5	3.3	3 Ã· 5
70 (686 N)	100 (980 N)	3.2	9	6.5	3.3	4 Ã· 6
70 (686 N)	100 (980 N)	3.2	10	6.5	3.3	5 Ã· 7
70 (686 N)	100 (980 N)	3.2	11	6.5	3.3	6 Ã· 8
70 (686 N)	100 (980 N)	3.2	12	6.5	3.3	7 Ã· 9
70 (686 N)	100 (980 N)	3.2	14	6.5	3.3	9 Ã· 11
70 (686 N)	100 (980 N)	3.2	16	6.5	3.3	11 Ã· 13
70 (686 N)	100 (980 N)	*3.2	18	6.5	3.3	13 Ã· 15

*Disponibile solo su richiesta e per quantitativi minimi di 30.000 pz.

1DI1

articoli di fissaggio > rivetti a strappo in alluminio > rivetti a strappo in alluminio

Rivetti in lega di alluminio AlMg 3.5

Con chiodo in acciaio zincato

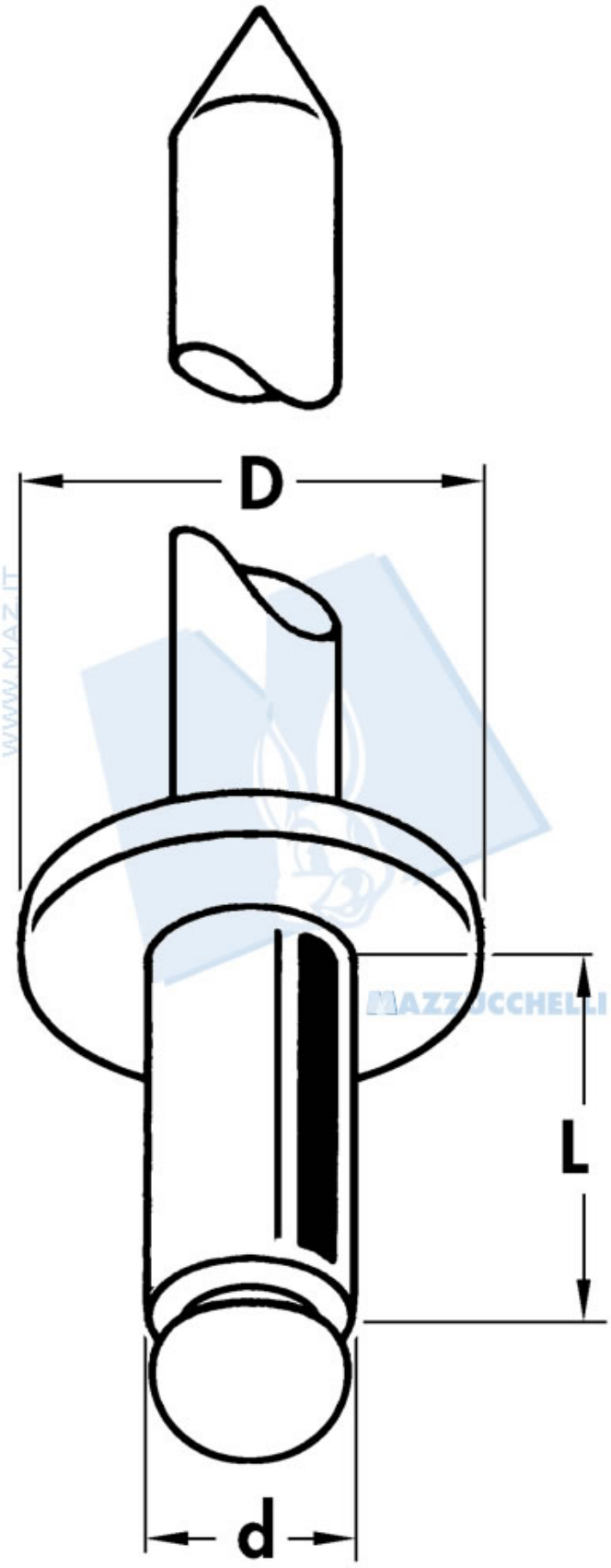

Kg	Kg	d	L	D	mm	mm min ÷ max
75 (735 N)	110 (1078 N)	3.4	5	7	3.5	0.5 Ã· 2
75 (735 N)	110 (1078 N)	3.4	6	7	3.5	1 Ã· 3
75 (735 N)	110 (1078 N)	3.4	7	7	3.5	2 Ã· 4
75 (735 N)	110 (1078 N)	3.4	8	7	3.5	3 Ã· 5
75 (735 N)	110 (1078 N)	3.4	9	7	3.5	4 Ã· 6
75 (735 N)	110 (1078 N)	3.4	10	7	3.5	5 Ã· 7
75 (735 N)	110 (1078 N)	3.4	11	7	3.5	6 Ã· 8

Kg	Kg	d	L	D	mm	mm min ÷ max
75 (735 N)	110 (1078 N)	3.4	12	7	3.5	7 Ã· 9
75 (735 N)	110 (1078 N)	3.4	14	7	3.5	9 Ã· 11
75 (735 N)	110 (1078 N)	3.4	16	7	3.5	11 Ã· 13
75 (735 N)	110 (1078 N)	3.4	18	7	3.5	13 Ã· 15
75 (735 N)	110 (1078 N)	*3.4	20	7	3.5	15 Ã· 17
130 (1274 N)	185 (1813 N)	4	5	8	4.1	0.5 Ã· 1.5
130 (1274 N)	185 (1813 N)	4	6	8	4.1	1.5 Ã· 2.5
130 (1274 N)	185 (1813 N)	4	7	8	4.1	2.5 Ã· 3.5
130 (1274 N)	185 (1813 N)	4	8	8	4.1	3.5 Ã· 4.5
130 (1274 N)	185 (1813 N)	4	9	8	4.1	4.5 Ã· 5.5
130 (1274 N)	185 (1813 N)	4	10	8	4.1	5.5 Ã· 6.5
130 (1274 N)	185 (1813 N)	4	11	8	4.1	6.5 Ã· 7.5
130 (1274 N)	185 (1813 N)	4	12	8	4.1	7.5 Ã· 8.5
130 (1274 N)	185 (1813 N)	4	14	8	4.1	8.5 Ã· 10.5
130 (1274 N)	185 (1813 N)	4	16	8	4.1	10.5 Ã· 12.5
130 (1274 N)	185 (1813 N)	4	18	8	4.1	12.5 Ã· 14.5
130 (1274 N)	185 (1813 N)	4	20	8	4.1	14.5 Ã· 16.5
130 (1274 N)	185 (1813 N)	4	22	8	4.1	16.5 Ã· 18.5
130 (1274 N)	185 (1813 N)	4	24	8	4.1	18.5 Ã· 20.5
130 (1274 N)	185 (1813 N)	4	26	8	4.1	20.5 Ã· 22.5
130 (1274 N)	185 (1813 N)	4	28	8	4.1	22.5 Ã· 24.5
130 (1274 N)	185 (1813 N)	4	30	8	4.1	24.5 Ã· 26.5

*Disponibile solo su richiesta e per quantitativi minimi di 30.000 pz.

©Mazzucchelli Srl via Sansovino, 243/65/T - 10151 Torino - Italy - tel +39 011 4532064 - fax +39 011 4540930 - www.maz.it - info@maz.it - Web application by BielleWeb - http://www.bielle.it

articoli di fissaggio > rivetti a strappo in alluminio > rivetti a strappo in alluminio

Rivetti in lega di alluminio AlMg 3.5

Con chiodo in acciaio zincato

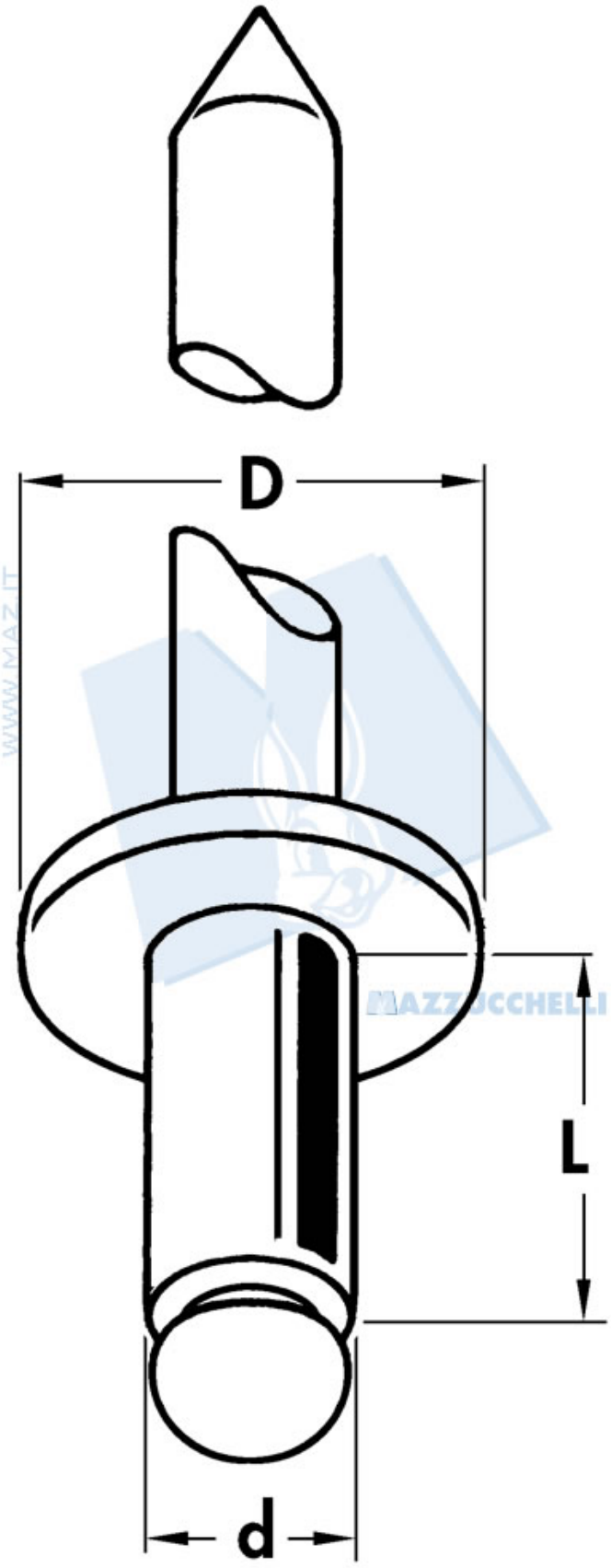

WWW.MAZ.IT
MAZZUCCHELLI

Kg	Kg	d	L	D	mm	mm min ÷ max
223 (2185 N)	304 (2979 N)	4.8	6	10	5	0.5 Ã· 2
223 (2185 N)	304 (2979 N)	4.8	7	10	5	2 Ã· 3
223 (2185 N)	304 (2979 N)	4.8	8	10	5	3 Ã· 4
223 (2185 N)	304 (2979 N)	4.8	9	10	5	4 Ã· 5
223 (2185 N)	304 (2979 N)	4.8	10	10	5	5 Ã· 6
223 (2185 N)	304 (2979 N)	4.8	11	10	5	6 Ã· 7
223 (2185 N)	304 (2979 N)	4.8	12	10	5	7 Ã· 8

 Kg	 Kg	d	L	D	 mm	 mm min ÷ max
223 (2185 N)	304 (2979 N)	4.8	14	10	5	8 Ã· 10
223 (2185 N)	304 (2979 N)	4.8	16	10	5	10 Ã· 12
223 (2185 N)	304 (2979 N)	4.8	18	10	5	12 Ã· 14
223 (2185 N)	304 (2979 N)	4.8	20	10	5	14 Ã· 16
223 (2185 N)	304 (2979 N)	4.8	22	10	5	16 Ã· 18
223 (2185 N)	304 (2979 N)	4.8	24	10	5	18 Ã· 20
223 (2185 N)	304 (2979 N)	4.8	26	10	5	20 Ã· 22
223 (2185 N)	304 (2979 N)	4.8	28	10	5	22 Ã· 24
223 (2185 N)	304 (2979 N)	4.8	30	10	5	24 Ã· 26
223 (2185 N)	304 (2979 N)	4.8	35	10	5	26 Ã· 31
223 (2185 N)	304 (2979 N)	4.8	40	10	5	31 Ã· 36
223 (2185 N)	304 (2979 N)	4.8	45	10	5	36 Ã· 41
223 (2185 N)	304 (2979 N)	4.8	50	10	5	41 Ã· 46

©Mazzucchelli Srl via Sansovino, 243/65/T - 10151 Torino - Italy - tel +39 011 4532064 - fax +39 011 4540930 - www.maz.it - info@maz.it - Web application by BielleWeb - http://www.bielle.it

articoli di fissaggio > rivetti a strappo in alluminio > rivetti a strappo in alluminio

Rivetti in lega di alluminio AlMg 5

Con chiodo in acciaio zincato

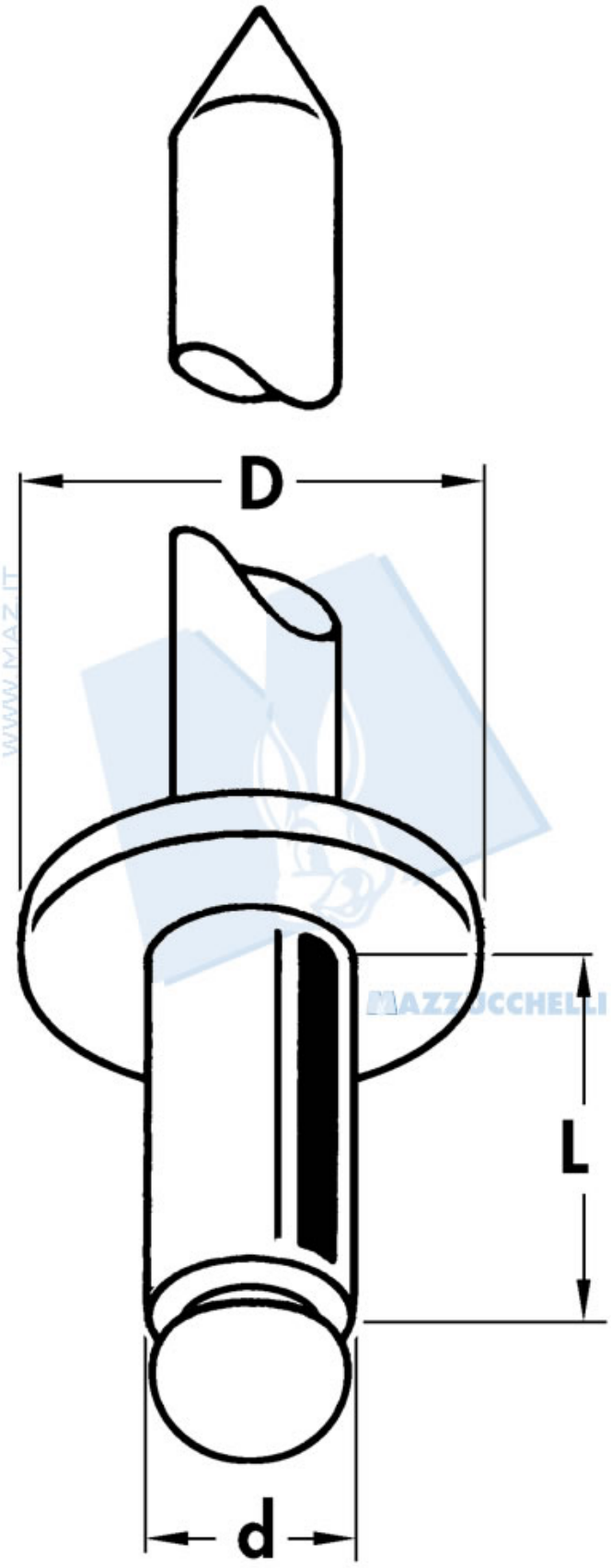

WWW.MAZ.IT
MAZZUCCHELLI

Kg	Kg	d	L	D	mm	mm min ÷ max
280 (2744 N)	433 (4341 N)	6	8	12	6.1	2 Ã· 3
280 (2744 N)	433 (4341 N)	6	10	12	6.1	3 Ã· 5
280 (2744 N)	433 (4341 N)	6	12	12	6.1	5 Ã· 7
280 (2744 N)	433 (4341 N)	6	15	12	6.1	7 Ã· 10
280 (2744 N)	433 (4341 N)	6	18	12	6.1	10 Ã· 13
280 (2744 N)	433 (4341 N)	6	22	12	6.1	13 Ã· 17
280 (2744 N)	433 (4341 N)	6	26	12	6.1	17 Ã· 21

 Kg	 Kg	d	L	D	 mm	 mm min ÷ max
280 (2744 N)	433 (4341 N)	6	30	12	6.1	21 Ã· 25
280 (2744 N)	433 (4341 N)	6	35	12	6.1	25 Ã· 30
280 (2744 N)	433 (4341 N)	6	40	12	6.1	30 Ã· 35
380 (3724 N)	632 (6193 N)	6.4	8	12	6.5	2 Ã· 3
380 (3724 N)	632 (6193 N)	6.4	10	12	6.5	3 Ã· 5
380 (3724 N)	632 (6193 N)	6.4	12	12	6.5	5 Ã· 7
380 (3724 N)	632 (6193 N)	6.4	15	12	6.5	7 Ã· 10
380 (3724 N)	632 (6193 N)	6.4	18	12	6.5	10 Ã· 13
380 (3724 N)	632 (6193 N)	6.4	22	12	6.5	13 Ã· 17
380 (3724 N)	632 (6193 N)	6.4	26	12	6.5	17 Ã· 21
380 (3724 N)	632 (6193 N)	6.4	30	12	6.5	21 Ã· 25
380 (3724 N)	632 (6193 N)	6.4	35	12	6.5	25 Ã· 30
380 (3724 N)	632 (6193 N)	6.4	40	12	6.5	30 Ã· 35
677 (6634 N)	979 (9594 N)	7.8	15	14	8	4 Ã· 9.5
677 (6634 N)	979 (9594 N)	7.8	18	14	8	9.5 Ã· 12.5
677 (6634 N)	979 (9594 N)	7.8	22	14	8	12.5 Ã· 16.5
677 (6634 N)	979 (9594 N)	7.8	26	14	8	16.5 Ã· 20.5
677 (6634 N)	979 (9594 N)	7.8	30	14	8	20.5 Ã· 24.5
677 (6634 N)	979 (9594 N)	7.8	35	14	8	24.5 Ã· 29.5
677 (6634 N)	979 (9594 N)	7.8	40	14	8	29.5 Ã· 34.5

©Mazzucchelli Srl via Sansovino, 243/65/T - 10151 Torino - Italy - tel +39 011 4532064 - fax +39 011 4540930 - www.maz.it - info@maz.it - Web application by BielleWeb - http://www.bielle.it

articoli di fissaggio > rivetti a strappo in alluminio > rivetti a strappo in alluminio

Rivetti in lega di alluminio AlMg 3.5

A testa larga

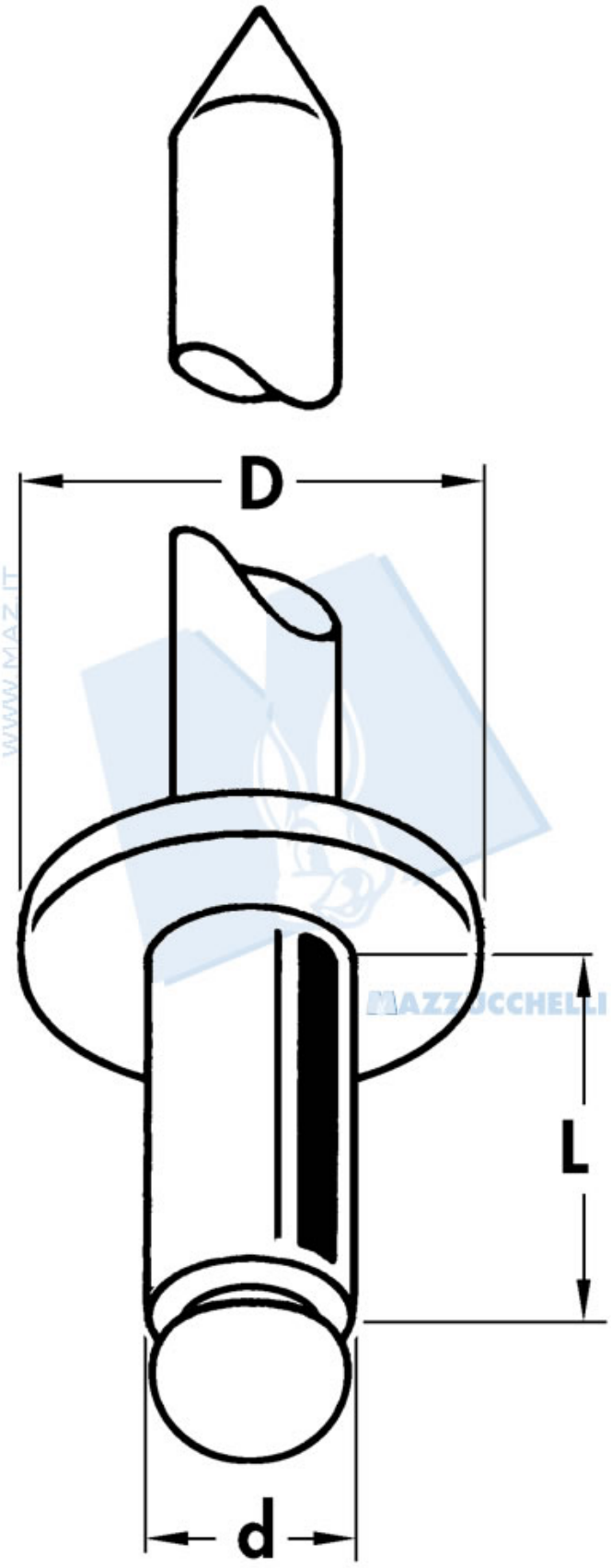

WWW.MAZ.IT
MAZZUCCHELLI

Kg	Kg	d	L	D	Ø mm	mm min ÷ max
70 (686 N)	100 (980 N)	3.2	8	10	3.3	3 Ã· 5
70 (686 N)	100 (980 N)	3.2	10	10	3.3	5 Ã· 7
70 (686 N)	100 (980 N)	3.2	12	10	3.3	7 Ã· 9
70 (686 N)	100 (980 N)	3.2	14	10	3.3	9 Ã· 11
130 (1274 N)	185 (1813 N)	4	7	10	4.1	2.5 Ã· 3.5
130 (1274 N)	185 (1813 N)	4	9	10	4.1	4.5 Ã· 5.5
130 (1274 N)	185 (1813 N)	4	9	10	4.1	4.5 Ã· 5.5

 Kg	 Kg	d	L	D	 mm	 mm min ÷ max
130 (1274 N)	185 (1813 N)	4	11	10	4.1	5.5 Ã· 7.5
130 (1274 N)	185 (1813 N)	4	13	10	4.1	7.5 Ã· 9.5
223 (2185 N)	304 (2979 N)	4.8	8	14	5	3 Ã· 4
223 (2185 N)	304 (2979 N)	4.8	9	14	5	4 Ã· 5
223 (2185 N)	304 (2979 N)	4.8	10	14	5	5 Ã· 6
223 (2185 N)	304 (2979 N)	4.8	12	14	5	6 Ã· 8
223 (2185 N)	304 (2979 N)	4.8	14	14	5	8 Ã· 10
223 (2185 N)	304 (2979 N)	4.8	16	14	5	10 Ã· 12
223 (2185 N)	304 (2979 N)	4.8	18	14	5	12 Ã· 14
223 (2185 N)	304 (2979 N)	4.8	20	14	5	14 Ã· 16
223 (2185 N)	304 (2979 N)	4.8	22	14	5	16 Ã· 18
223 (2185 N)	304 (2979 N)	4.8	24	14	5	18 Ã· 20
223 (2185 N)	304 (2979 N)	4.8	26	14	5	20 Ã· 22
223 (2185 N)	304 (2979 N)	4.8	28	14	5	22 Ã· 24
223 (2185 N)	304 (2979 N)	4.8	30	14	5	24 Ã· 26
223 (2185 N)	304 (2979 N)	4.8	35	14	5	26 Ã· 31

©Mazzucchelli Srl via Sansovino, 243/65/T - 10151 Torino - Italy - tel +39 011 4532064 - fax +39 011 4540930 - www.maz.it - info@maz.it - Web application by BielleWeb - http://www.bielle.it

articoli di fissaggio > rivetti a strappo in alluminio > rivetti a strappo in alluminio

Rivetti in lega di alluminio AlMg 3.5

A testa larga

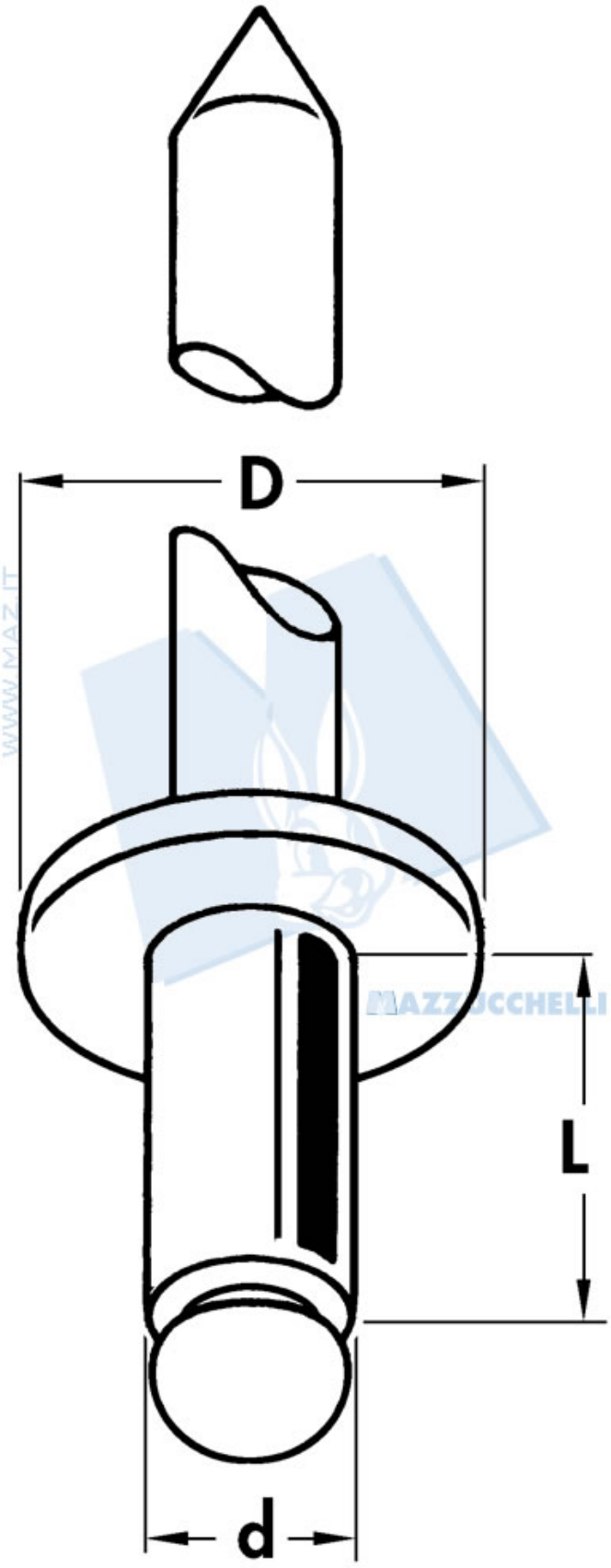

WWW.MAZ.IT
MAZZUCCHELLI

Kg	Kg	d	L	D	mm	mm min ÷ max
223 (2185 N)	304 (2979 N)	4.8	10	16	5	5 Ã· 6
223 (2185 N)	304 (2979 N)	4.8	12	16	5	6 Ã· 8
223 (2185 N)	304 (2979 N)	4.8	14	16	5	8 Ã· 10
223 (2185 N)	304 (2979 N)	4.8	16	16	5	10 Ã· 12
223 (2185 N)	304 (2979 N)	4.8	18	16	5	12 Ã· 14
223 (2185 N)	304 (2979 N)	4.8	20	16	5	14 Ã· 16
223 (2185 N)	304 (2979 N)	4.8	22	16	5	16 Ã· 18

 Kg	 Kg	d	L	D	 mm	 mm min ÷ max
223 (2185 N)	304 (2979 N)	4.8	24	16	5	18 Ã· 20
223 (2185 N)	304 (2979 N)	4.8	26	16	5	20 Ã· 22
223 (2185 N)	304 (2979 N)	4.8	28	16	5	22 Ã· 24
223 (2185 N)	304 (2979 N)	4.8	30	16	5	24 Ã· 26
223 (2185 N)	304 (2979 N)	4.8	35	16	5	26 Ã· 31

©Mazzucchelli Srl via Sansovino, 243/65/T - 10151 Torino - Italy - tel +39 011 4532064 - fax +39 011 4540930 - www.maz.it - info@maz.it - Web application by BielleWeb - http://www.bielle.it

articoli di fissaggio > rivetti a strappo in alluminio > rivetti a strappo in alluminio

Rivetti a testa svasata in lega di alluminio AlMg 3.5

Con chiodo in acciaio zincato

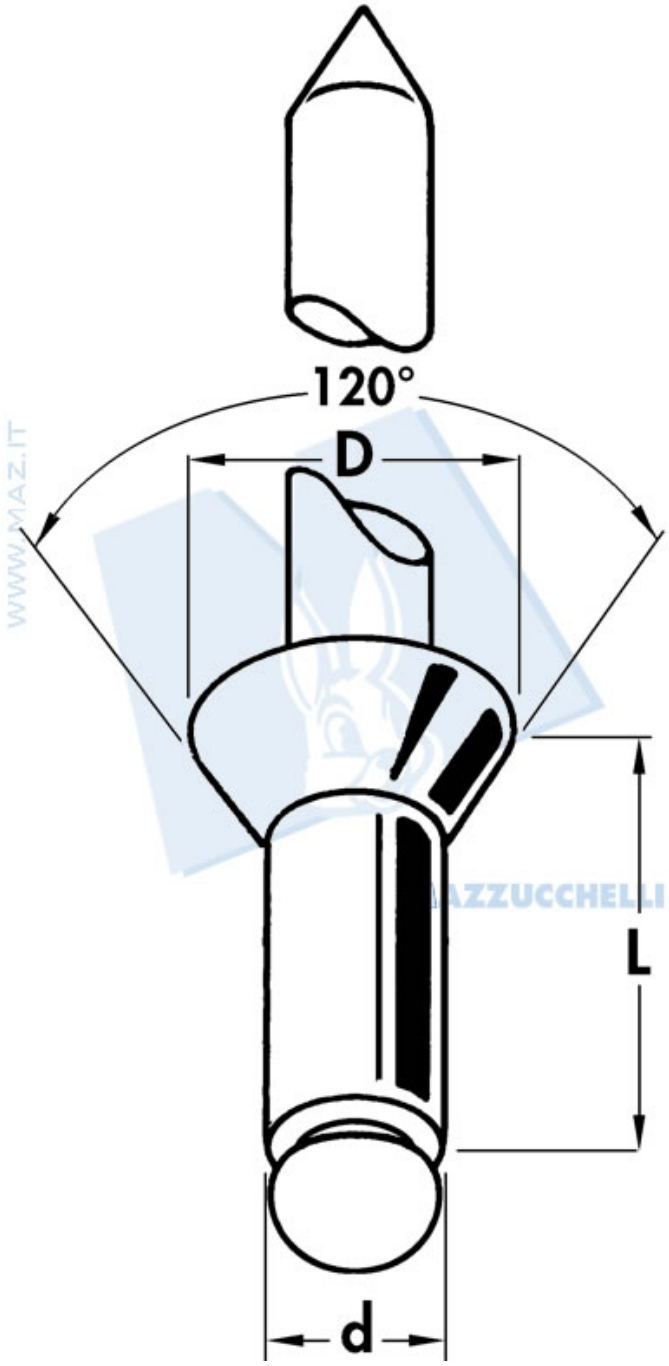

 Kg	 Kg	d	L	D	 mm	 mm min ÷ max
70 (686 N)	100 (980 N)	3.2	7	6.5	3.3	2 Ã· 4
70 (686 N)	100 (980 N)	3.2	9	6.5	3.3	4 Ã· 6
70 (686 N)	100 (980 N)	3.2	11	6.5	3.3	6 Ã· 8
70 (686 N)	100 (980 N)	3.2	13	6.5	3.3	8 Ã· 10
130 (1274 N)	185 (1813 N)	4	7	8	4.1	3 Ã· 4
130 (1274 N)	185 (1813 N)	4	9	8	4.1	4 Ã· 6
130 (1274 N)	185 (1813 N)	4	11	8	4.1	6 Ã· 8
130 (1274 N)	185 (1813 N)	4	12	8	4.1	8 Ã· 9
130 (1274 N)	185 (1813 N)	4	14	8	4.1	9 Ã· 11
130 (1274 N)	185 (1813 N)	4	16	8	4.1	11 Ã· 13
130 (1274 N)	185 (1813 N)	4	18	8	4.1	13 Ã· 15
130 (1274 N)	185 (1813 N)	4	20	8	4.1	15 Ã· 17
223 (2185 N)	304 (2979 N)	4.8	7	10	5	3 Ã· 4
223 (2185 N)	304 (2979 N)	4.8	9	10	5	4 Ã· 5
223 (2185 N)	304 (2979 N)	4.8	11	10	5	5 Ã· 7
223 (2185 N)	304 (2979 N)	4.8	12	10	5	7 Ã· 8
223 (2185 N)	304 (2979 N)	4.8	14	10	5	8 Ã· 10
223 (2185 N)	304 (2979 N)	4.8	16	10	5	10 Ã· 12
223 (2185 N)	304 (2979 N)	4.8	18	10	5	12 Ã· 14
223 (2185 N)	304 (2979 N)	4.8	20	10	5	14 Ã· 16

©Mazzucchelli Srl via Sansovino, 243/65/T - 10151 Torino - Italy - tel +39 011 4532064 - fax +39 011 4540930 - www.maz.it - info@maz.it - Web application by BielleWeb - http://www.bielle.it

articoli di fissaggio > rivetti a strappo in alluminio > rivetti a strappo in alluminio

Rivetti in lega di alluminio AlMg 3.5

Anodizzati neri con testa larga

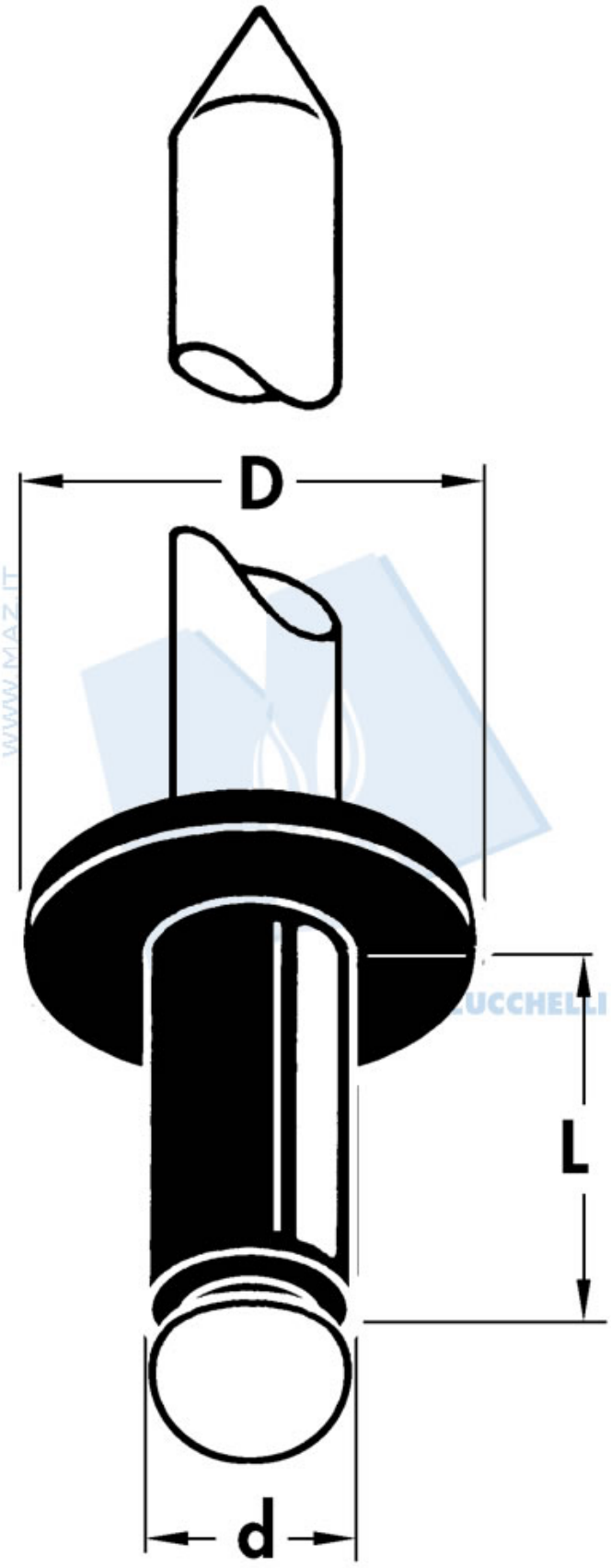

Kg	Kg	d	L	D	mm	mm min ÷ max
70 (686 N)	100 (980 N)	3.2	12	10	3.3	7 Ã· 9
70 (686 N)	100 (980 N)	3.2	14	10	3.3	9 Ã· 11
70 (686 N)	100 (980 N)	3.2	16	10	3.3	11 Ã· 13
70 (686 N)	100 (980 N)	3.2	18	10	3.3	13 Ã· 15
70 (686 N)	100 (980 N)	3.2	20	10	3.3	15 Ã· 17

8DI1

©Mazzucchelli Srl via Sansovino, 243/65/T - 10151 Torino - Italy - tel +39 011 4532064 - fax +39 011 4540930 - www.maz.it - info@maz.it - Web application by BielleWeb - http://www.bielle.it

articoli di fissaggio > rivetti a strappo in alluminio > rivetti a strappo in alluminio

Rivetti tutto alluminio -
 Boccola AlMg 2 Chiodo AlMg 5

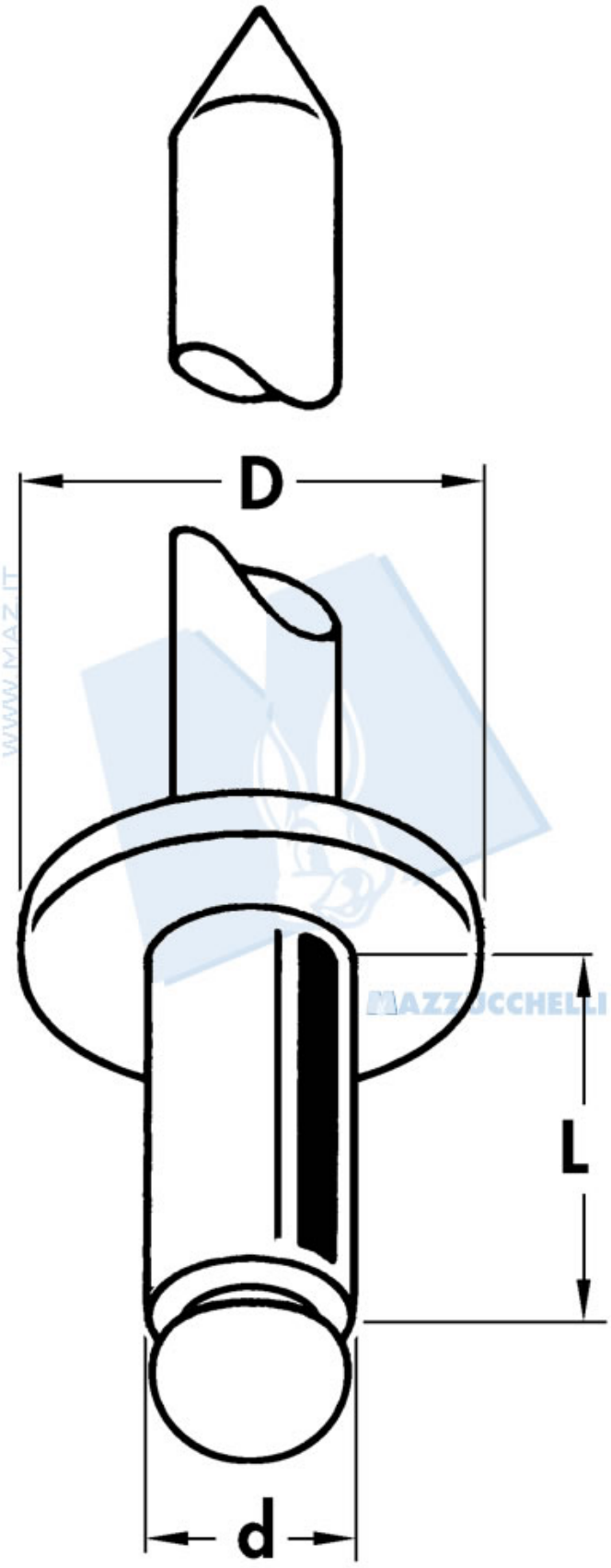

WWW.MAZ.IT
MAZZUCCHELLI

Kg	Kg	d	L	D	mm	mm min ÷ max
44 (431 N)	76 (744 N)	3.2	6	6.5	3.3	0.5 Ã· 3
44 (431 N)	76 (744 N)	3.2	8	6.5	3.3	3 Ã· 5
44 (431 N)	76 (744 N)	3.2	10	6.5	3.3	5 Ã· 7
44 (431 N)	76 (744 N)	3.2	12	6.5	3.3	7 Ã· 9
89 (872 N)	128 (1254 N)	4	6	8	4.1	0.5 Ã· 2.5
89 (872 N)	128 (1254 N)	4	8	8	4.1	2.5 Ã· 4.5
89 (872 N)	128 (1254 N)	4	10	8	4.1	4.5 Ã· 6.5

 Kg	 Kg	d	L	D	 mm	 mm min ÷ max
89 (872 N)	128 (1254 N)	4	12	8	4.1	6.5 Ã· 8.5
89 (872 N)	128 (1254 N)	4	14	8	4.1	8.5 Ã· 10.5
89 (872 N)	128 (1254 N)	4	16	8	4.1	10.5 Ã· 12.5
89 (872 N)	128 (1254 N)	4	18	8	4.1	12.5 Ã· 14.5
109 (1068 N)	157 (1538 N)	4.8	8	10	5	2 Ã· 4
109 (1068 N)	157 (1538 N)	4.8	10	10	5	4 Ã· 6
109 (1068 N)	157 (1538 N)	4.8	12	10	5	6 Ã· 8
109 (1068 N)	157 (1535 N)	4.8	14	10	5	8 Ã· 10
109 (1068 N)	157 (1538 N)	4.8	16	10	5	10 Ã· 12
109 (1068 N)	157 (1538 N)	4.8	18	10	5	12 Ã·14

©Mazzucchelli Srl via Sansovino, 243/65/T - 10151 Torino - Italy - tel +39 011 4532064 - fax +39 011 4540930 - www.maz.it - info@maz.it - Web application by BielleWeb - http://www.bielle.it