articoli di fissaggio > rivetti a strappo ermetici > rivetti a strappo ermetici

Rivetti ermetici AlMg 5

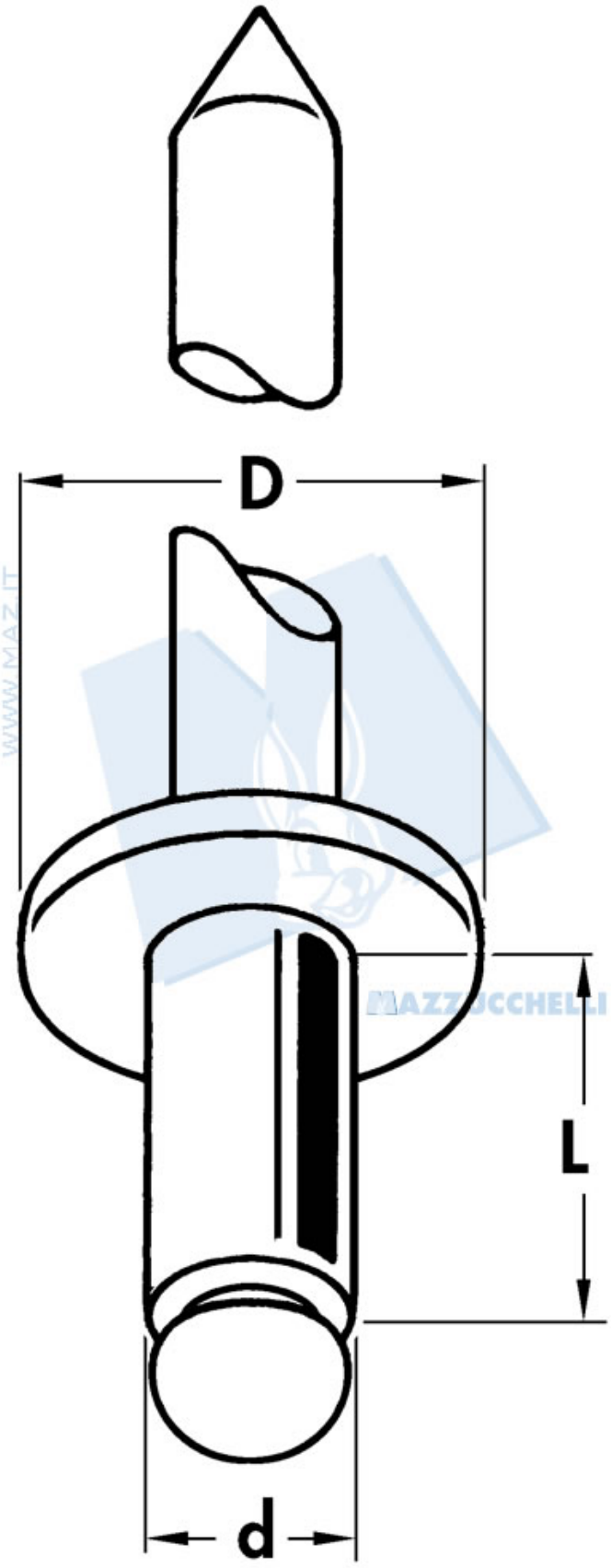

Kg	Kg	d	L	D	mm	mm min ÷ max
105 (1029 N)	160 (1568 N)	3.2	6	6	3.3	0.8 Ã· 2.0
105 (1029 N)	160 (1568 N)	3.2	8	6	3.3	2.0 Ã· 3.5
105 (1029 N)	160 (1568 N)	3.2	9	6	3.3	3.5 Ã· 4.5
105 (1029 N)	160 (1568 N)	3.2	11	6	3.3	4.5 Ã· 6.5
105 (1029 N)	160 (1568 N)	3.2	13	6	3.3	6.5 Ã· 8.5
155 (1519 N)	220 (2156 N)	4	8	8	4.1	0.8 Ã· 3.5
155 (1519 N)	220 (2156 N)	4	10	8	4.1	3.5 Ã· 5.5

 Kg	 Kg	d	L	D	 mm	 mm min ÷ max
155 (1519 N)	220 (2156 N)	4	13	8	4.1	5.5 Ã· 8.5
210 (2058 N)	310 (3038 N)	4.8	8	9.5	5	0.8 Ã· 3.5
210 (2058 N)	310 (3038 N)	4.8	10	9.5	5	3.5 Ã· 5.5
210 (2058 N)	310 (3038 N)	4.8	12	9.5	5	5.5 Ã· 7.5
210 (2058 N)	310 (3038 N)	4.8	15	9.5	5	7.5 Ã· 10.5
210 (2058 N)	310 (3038 N)	4.8	18	9.5	5	10.5 Ã· 13.5
210 (2058 N)	310 (3038 N)	4.8	22	9.5	5	13.5 Ã· 17.5

©Mazzucchelli Srl via Sansovino, 243/65/T - 10151 Torino - Italy - tel +39 011 4532064 - fax +39 011 4540930 - www.maz.it - info@maz.it - Web application by BielleWeb - http://www.bielle.it

articoli di fissaggio > rivetti a strappo ermetici > rivetti a strappo ermetici

Rivetti ermetici a testa svasata alluminio AlMg 5

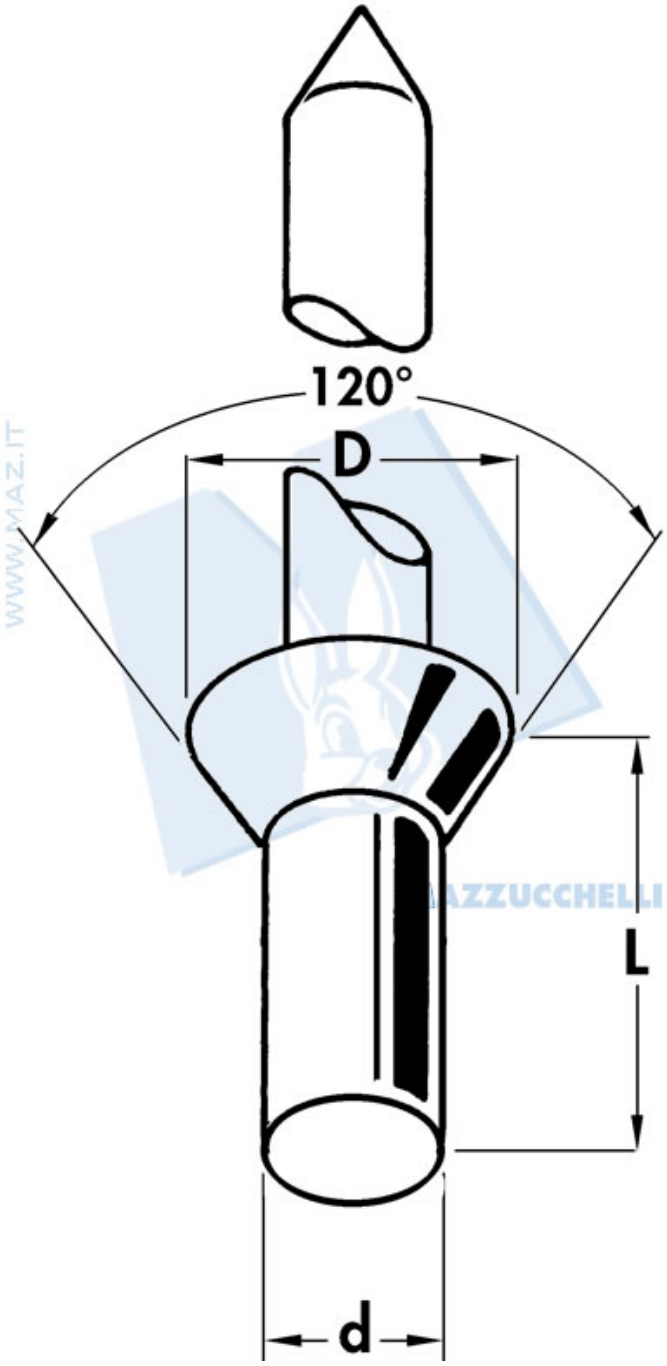

Kg	Kg	d	L	D	mm	mm min ÷ max
105 (1029 N)	160 (1568 N)	3.2	7	6	3.3	1.7 Ã· 3.0
105 (1029 N)	160 (1568 N)	3.2	9	6	3.3	3.0 Ã· 4.5
105 (1029 N)	160 (1568 N)	3.2	10	6	3.3	4.5 Ã· 5.5

 Kg	 Kg	d	L	D	 mm	 mm min ÷ max
105 (1029 N)	160 (1568 N)	3.2	12	6	3.3	5.5 Ã· 7.5
105 (1029 N)	160 (1568 N)	3.2	13	6	3.3	7.5 Ã· 8.5
155 (1519 N)	220 (2156 N)	4	9	8	4.1	2.8 Ã· 4.5
155 (1519 N)	220 (2156 N)	4	11	8	4.1	4.5 Ã· 6.5
155 (1519 N)	220 (2156 N)	4	12	8	4.1	6.5 Ã· 7.5
155 (1519 N)	220 (2156 N)	4	14	8	4.1	7.5 Ã· 9.5
210 (2058 N)	310 (3038 N)	4.8	9	9.5	5	3.0 Ã· 4.5
210 (2058 N)	310 (3038 N)	4.8	11	9.5	5	4.5 Ã· 6.5
210 (2058 N)	310 (3038 N)	4.8	12	9.5	5	6.5 Ã· 7.5
210 (2058 N)	310 (3038 N)	4.8	14	9.5	5	7.5 Ã· 9.5
210 (2058 N)	310 (3038 N)	4.8	15	9.5	5	9.5 Ã· 10.5
210 (2058 N)	310 (3038 N)	4.8	19	9.5	5	10.5 Ã· 14.5

©Mazzucchelli Srl via Sansovino, 243/65/T - 10151 Torino - Italy - tel +39 011 4532064 - fax +39 011 4540930 - www.maz.it - info@maz.it - Web application by BielleWeb - http://www.bielle.it

articoli di fissaggio > rivetti a strappo ermetici > rivetti a strappo ermetici

Rivetti ermetici in alluminio AlMg 5

Con chiodo in acciaio inox

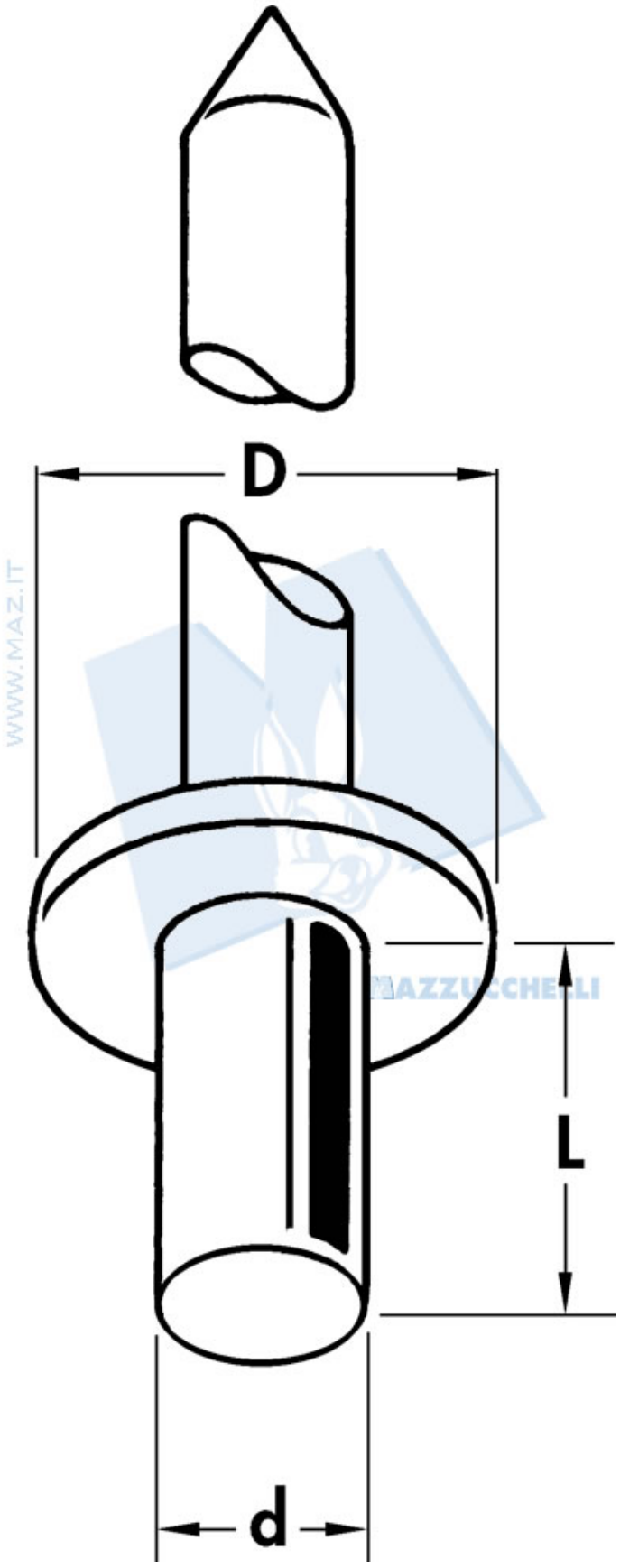

WWW.MAZ.IT
MAZZUCCHELLI

Kg	Kg	d	L	D	mm	mm min ÷ max
105 (1029 N)	140 (1372 N)	3.2	6	6	3.3	0.8 Ã· 2
105 (1029 N)	140 (1372 N)	3.2	8	6	3.3	2 Ã· 3.5
105 (1029 N)	140 (1372 N)	3.2	9	6	3.3	3.5 Ã· 4.5
105 (1029 N)	140 (1372 N)	3.2	11	6	3.3	4.5 Ã· 6.5
105 (1029 N)	140 (1372 N)	3.2	12	6	3.3	6.5 Ã· 7.5
155 (1519 N)	220 (2156 N)	4	8	8	4.1	0.8 Ã· 3.5

 Kg	 Kg	d	L	D	 mm	 mm min ÷ max
155 (1519 N)	220 (2156 N)	4	9	8	4.1	3.5 Ã· 4.5
155 (1519 N)	220 (2156 N)	4	11	8	4.1	4.5 Ã· 6.5
155 (1519 N)	220 (2156 N)	4	12	8	4.1	6.5 Ã· 7.5
210 (2058 N)	310 (3038 N)	4.8	8	9.5	5	0.8 Ã· 3.5
210 (2058 N)	310 (3038 N)	4.8	9	9.5	5	3.5 Ã· 4.5
210 (2058 N)	310 (3038 N)	4.8	11	9.5	5	4.5 Ã· 6.5
210 (2058 N)	310 (3038 N)	4.8	12	9.5	5	6.5 Ã· 7.5
210 (2058 N)	310 (3038 N)	4.8	14	9.5	5	7.5 Ã· 9.5
210 (2058 N)	310 (3038 N)	4.8	16	9.5	5	9.5 Ã· 11.5
210 (2058 N)	310 (3038 N)	4.8	18	9.5	5	11.5 Ã· 13.5
210 (2058 N)	310 (3038 N)	4.8	21	9.5	5	13.5 Ã· 15.5

©Mazzucchelli Srl via Sansovino, 243/65/T - 10151 Torino - Italy - tel +39 011 4532064 - fax +39 011 4540930 - www.maz.it - info@maz.it - Web application by BielleWeb - http://www.bielle.it

articoli di fissaggio > rivetti a strappo ermetici > rivetti a strappo ermetici

Rivetti ermetici in rame

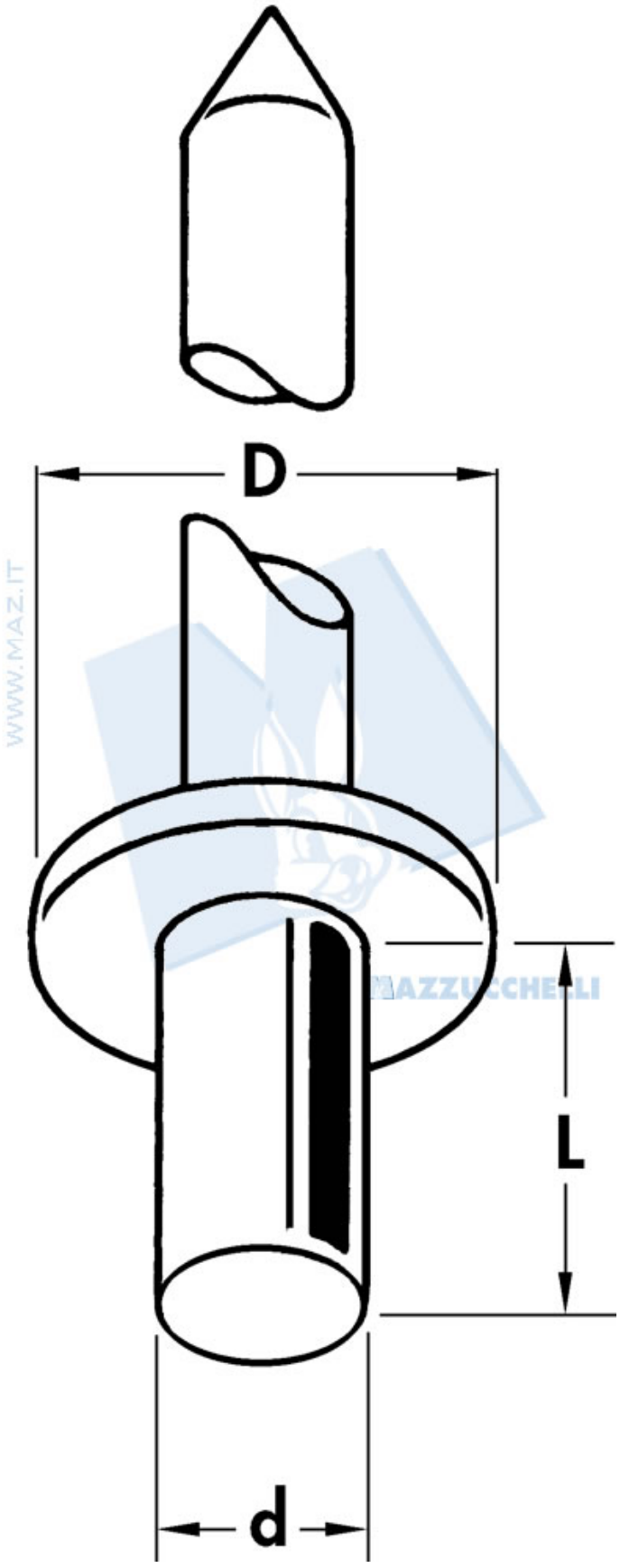

WWW.MAZ.IT
MAZZUCCHELLI

Kg	Kg	d	L	D	mm	mm min ÷ max
100 (980 N)	140 (1372 N)	3.2	8	6	3.3	0.8 Ã· 3.5
100 (980 N)	140 (1372 N)	3.2	9	6	3.3	3.5 Ã· 4.5
100 (980 N)	140 (1372 N)	3.2	12	6	3.3	4.5 Ã· 7.5
145 (1421 N)	225 (2205 N)	4	8	8	4.1	0.8 Ã· 3.5

Kg	Kg	d	L	D	mm	mm min ÷ max
145 (1421 N)	225 (2205 N)	4	10	8	4.1	3.5 Ã· 5.5
195 (2058 N)	300 (3038 N)	4.8	9	9.5	5	0.8 Ã· 4.5
195 (2058 N)	300 (3038 N)	4.8	11	9.5	5	4.5 Ã· 6.5

©Mazzucchelli Srl via Sansovino, 243/65/T - 10151 Torino - Italy - tel +39 011 4532064 - fax +39 011 4540930 - www.maz.it - info@maz.it - Web application by BielleWeb - http://www.bielle.it