minuteria per usi diversi > occhielli calottati, rivetti perforanti e rivetti maschio-femmina > occhielli calottati, rivetti perforanti e rivetti maschio-femmin

Rivetti maschio/femmina*

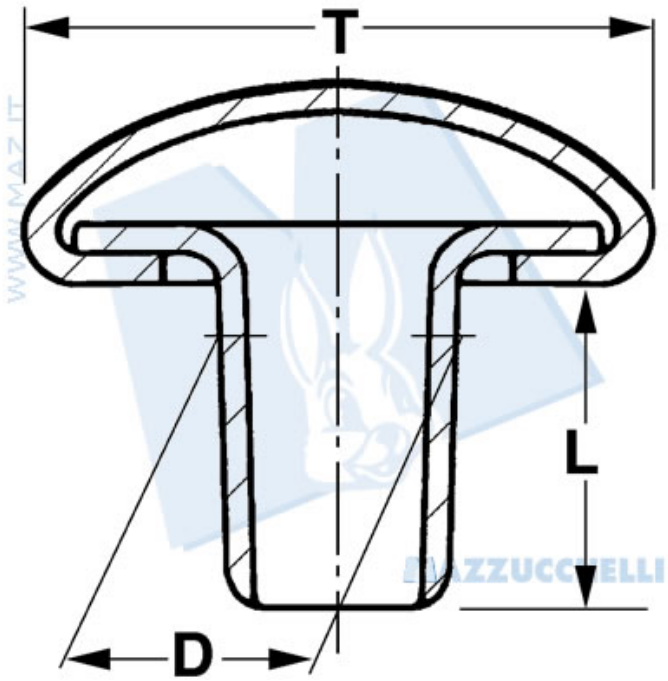

Nr. Cod.	Tipo	D	L	T
T 1	Testa / Female rivet	29	23	48
G 1	Gambo / Male rivet	23.5	47	48
T 2	Testa / Female rivet	32	28	58
G 2	Gambo / Male rivet	28	65	68
T 3	Testa / Female rivet	38.5	32	68
G 3	Gambo / Male rivet	31.5	78	75
T 3	Testa / Female rivet	38.5	32	68
G 3 1/2 (G 4)	Gambo / Male rivet	33	85	80
T 3	Testa / Female rivet	38.5	32	68
G 3 3/4 (G 4 1/2)	Gambo / Male rivet	31.5	100	90
T 4	Testa / Female rivet	38	31	75
G 4	Gambo / Male rivet	33	85	80
T 4	Testa / Female rivet	38	31	75
G 4 1/2	Gambo / Male rivet	31.5	100	90
T 4	Testa / Female rivet	38	31	75
G 4 3/4	Gambo / Male rivet	35.5	110	90
T 114	Testa / Female rivet	40	34	100
G 4	Gambo / Male rivet	33	85	80
T 116	Testa / Female rivet	38	35	110
G 116	Gambo / Male rivet	31	90	100
T 116	Testa / Female rivet	38	35	110
G 116 3/4	Gambo / Male rivet	31	104	100
T 116	Testa / Female rivet	38	35	110
G 136	Gambo / Male rivet	30	150	100
T 117	Testa / Female rivet	45	45	128
G 117 3/4	Gambo / Male rivet	33.5	115	110
T 139	Testa / Female rivet	54	46	104
G 139	Gambo / Male rivet	47.5	140	95
T 141	Testa / Female rivet	62	93.5	128
G 141	Gambo / Male rivet	52	175	120

1DI2

*Rivetti maschio/femmina a testa piana da sovrichiesta. Per le quote espresse in decimi di millimetro

minuteria per usi diversi > occhielli calottati, rivetti perforanti e rivetti maschio-femmina > occhielli calottati, rivetti perforanti e rivetti maschio-femmin

Rivetti maschio/femmina*

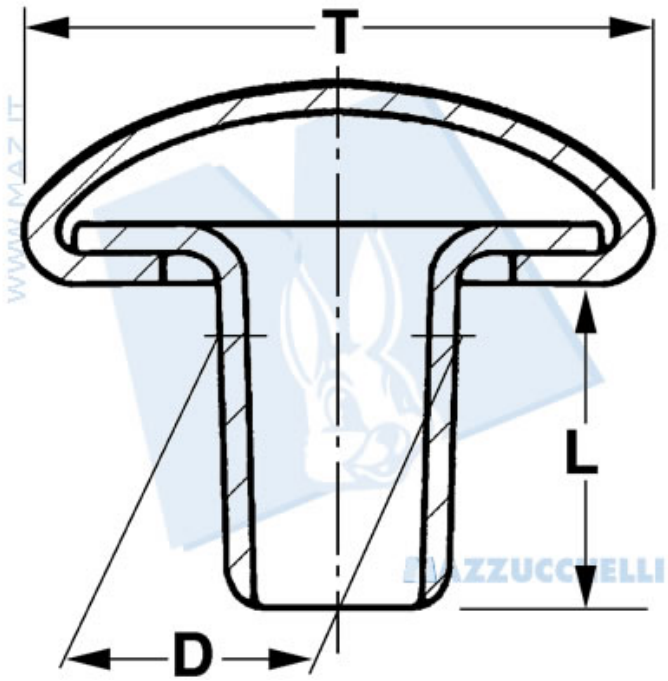

Nr. Cod.	Tipo	D	L	T
T 2	Testa / Female rivet	32	28	58
G 202	Gambo / Male rivet	28	60	58
T 2	Testa / Female rivet	32	28	58
G 202 1/2	Gambo / Male rivet	28	77.5	58
T 2	Testa / Female rivet	32	28	58
G 202 3/4	Gambo / Male rivet	28	92.5	58
T 3	Testa / Female rivet	38.5	32	68
G 203	Gambo / Male rivet	31.5	75	68
T 3	Testa / Female rivet	38.5	32	68
G 203 1/2	Gambo / Male rivet	35	85	68
T 3	Testa / Female rivet	38.5	32	68
G 203 3/4	Gambo / Male rivet	35	98	68
T 4	Testa / Female rivet	38	31	75
G 204	Gambo / Male rivet	33	85	75
T 114	Testa / Female rivet	40	34	100
G 241	Gambo / Male rivet	35	87	100
T 116	Testa / Female rivet	38	35	110
G 216	Gambo / Male rivet	31.5	87	110
T 116	Testa / Female rivet	38	35	110
G 216 3/4	Gambo / Male rivet	31	102	110
T 116	Testa / Female rivet	38	35	110
G 236	Gambo / Male rivet	30	147	110
T 117	Testa / Female rivet	45	45	128
G 217 3/4	Gambo / Male rivet	31.5	112	128
T 139	Testa / Female rivet	54	46	104
G 239	Gambo / Male rivet	47.5	138	104
T 141	Testa / Female rivet	62	93.5	128
G 241	Gambo rivet	52	170	128
T 141	Testa / Female rivet	62	93.5	128
G 249	Gambo / Male rivet	51.5	226	128

*Rivetti con testa piana solo su richiesta.

Quote espresse in decimi di millimetro

2DI2

©Mazzucchelli Srl via Sansovino, 243/65/T - 10151 Torino - Italy - tel +39 011 4532064 - fax +39 011 4540930 - www.maz.it - info@maz.it - Web application by BielleWeb - http://www.bielle.it